Hranipex

Artikelnummer: F004608

Riex ND30 Set mit 2 Vierkant Relings und Rückwandbefestigung, 137/450 mm, Weiß

Parameter

Marke	Riex
Farbe	Weiß
Länge	450 mm
Höhe	137 mm
Railingform	Platz
Model	ND30
Menge im Karton	20

Produktbeschreibung

Riex ND30 Set of Longitudinal Railings with Back Brackets Upgrade your ND30 drawers with this versatile set of longitudinal railings designed for enhanced stability and customisation. Perfect for supporting raised drawer sides, these railings combine functionality with style. Key Features: Maximum Reinforcement: Includes 2 or 4 railings per set for maximum reinforcement. Adjustable Length: Adjustable length achieved by rotating the front of the railing. Secure Attachment: Secure attachment at the back with snap-in back panel brackets. Stable Mounting: Front mounted using a 10 mm dowel for added stability. Ensure a seamless and robust drawer system with these premium railings tailored for ND30 raised side configurations.

Weitere Bilder

Zubehör

Riex ND30 Montageschablone für Relings
F004580

Komponenten

Riex ND30 Doppelwand Schubkasten, Basisschubkasten, 86/450 mm, Weiß
F004584

Anleitung

RIEX

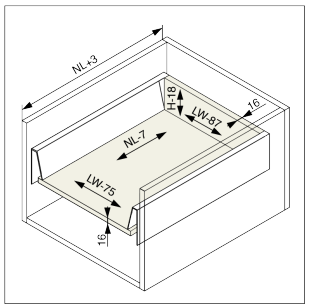

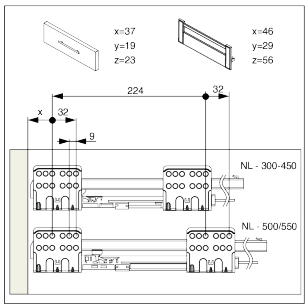

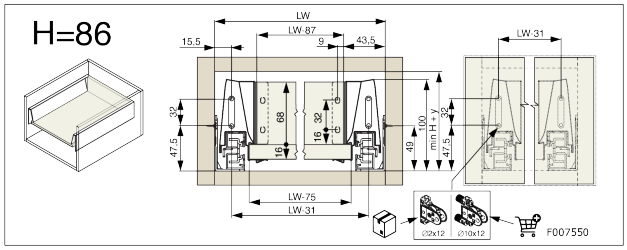

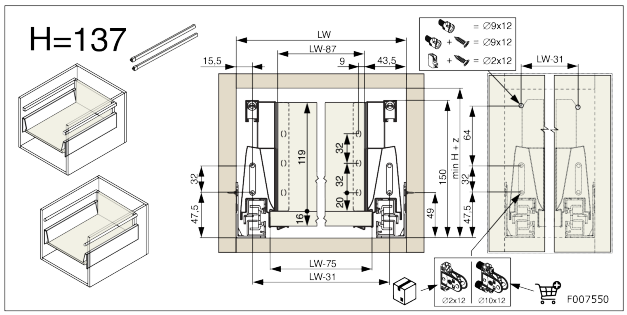

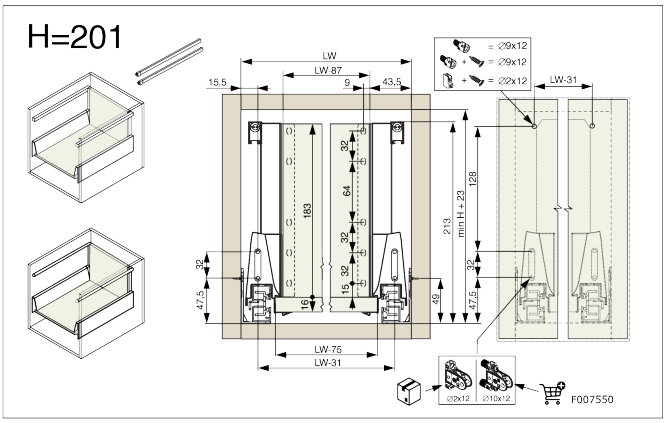

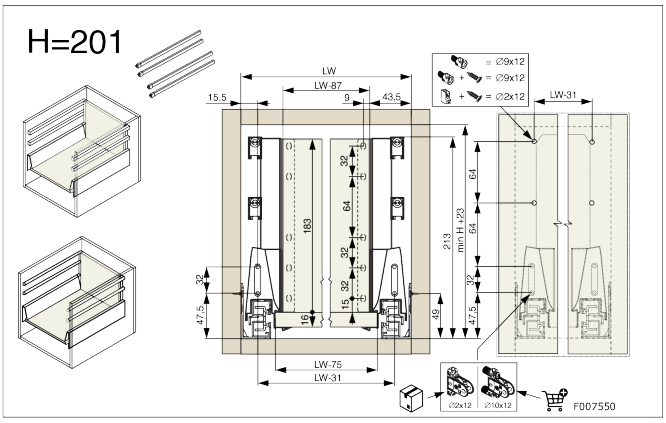

rev08

Hranipex

Artikelnummer: F004608

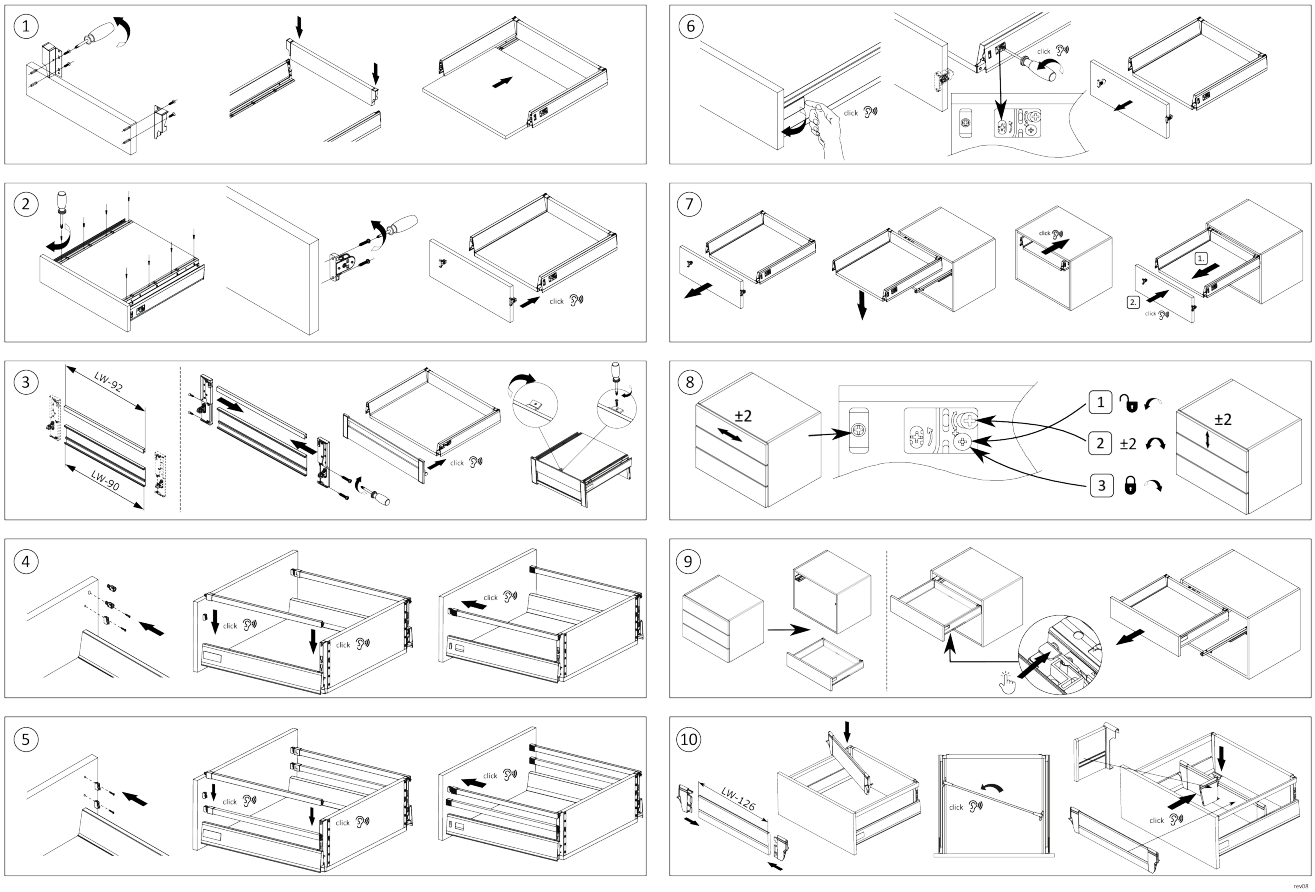

2D-Zeichnung

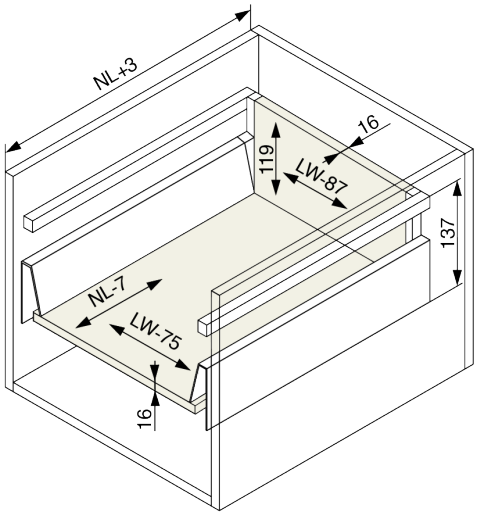

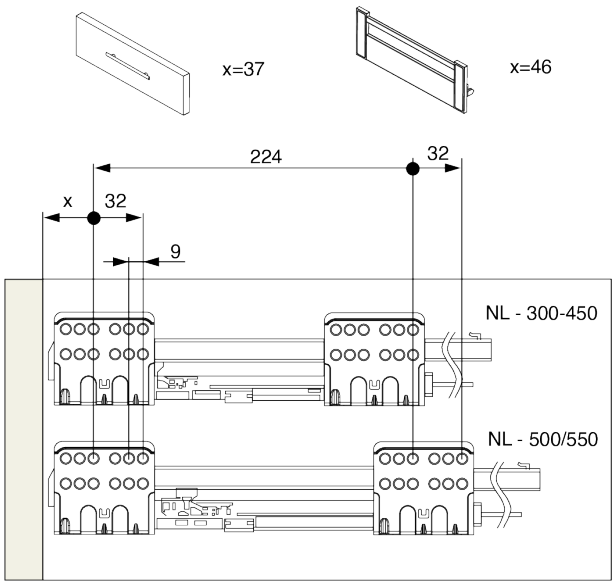

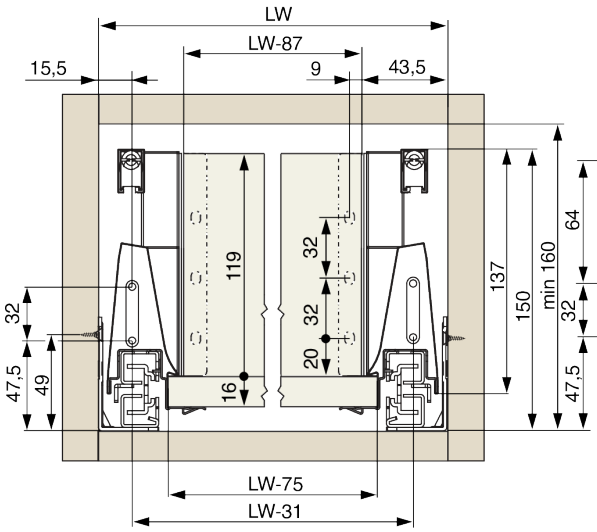

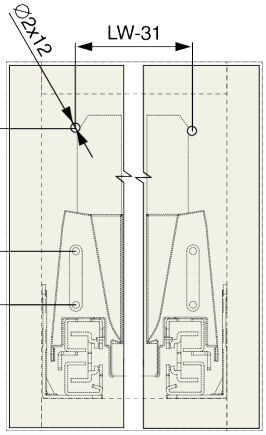

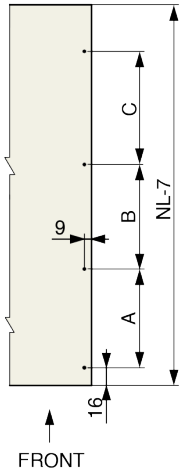

NL	A	B	C
270	157	-	-
300	157	113	-
350	157	113	-
400	157	113	-
450	157	113	146
500	157	113	146
550	157	113	146